Valve Adjustment

Meets ASE Task: (A1-B-5) P-3 Adjust valves (mechanical or hydraulic lifters).

Name:_____ Date:_____ Time on Task:_____

Make/Model/Year:_____ VIN:_____

Evaluation (Enter number from 4, 3, 2, 1) :_____

☐ **1.** Check service information and determine the specified procedure to follow to adjust the valves. List the procedure:

_____

_____

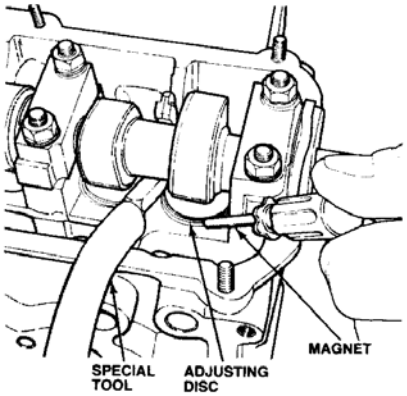

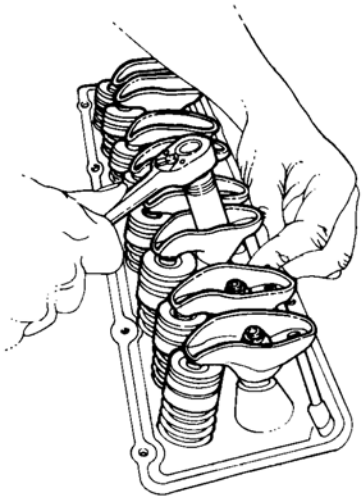

☐ **2.** Compare the original valve clearance or adjustment to the specified clearance.

		Original	Specified
Cylinder #1	**Intake**	_____	_____
	Exhaust	_____	_____
Cylinder #2	**Intake**	_____	_____
	Exhaust	_____	_____
Cylinder #3	**Intake**	_____	_____
	Exhaust	_____	_____
Cylinder #4	**Intake**	_____	_____
	Exhaust	_____	_____
Cylinder #5	**Intake**	_____	_____
	Exhaust	_____	_____
Cylinder #6	**Intake**	_____	_____
	Exhaust	_____	_____
Cylinder #7	**Intake**	_____	_____
	Exhaust	_____	_____
Cylinder #8	**Intake**	_____	_____
	Exhaust	_____	_____

Pearson

Education Foundation