Blower Motor Circuit

Meets ASE Task: (A7-D-1) P-1 Diagnose operation of motor-driven accessory; determine needed action.

Name _____ **Date** _____ **Time on Task** _____

Make/Model/Year _____ **VIN** _____ **Evaluation: 4 3 2 1**

_____ **1.** Check service information and determine the specified testing procedures.

_____

_____

_____ **2.** Locate the blower motor schematic and determine the following information:

a. Describe the location _____

b. Is the blower motor accessible from inside the vehicle or from under the hood?

_____

c. List the wire colors and their gauge:

Power = _____

Ground = _____

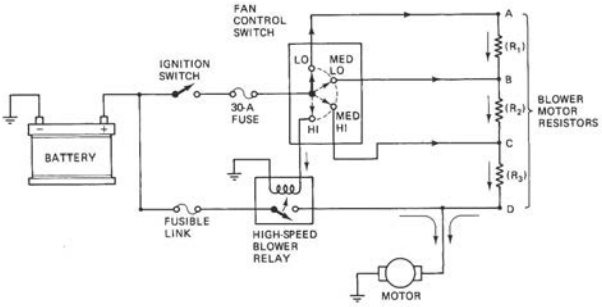

_____ **3.** How are the various speeds controlled?

_____ Resistor pack

_____ Electronic controller

_____ Other (describe) _____

_____ **4.** What fuse number (label) and amperage rating are used for the blower motor?

a. Fuse number (label) _____

b. Fuse rating _____

_____ **5.** Describe the location of the ground(s) for the blower motor circuit. _____

_____

_____ **6.** Measure the current draw of the blower motor on high speed.

Amperage = _____ (normal blower motor amperage draw is about 12-14 amperes)

_____ **7.** Based on the inspection and test results, what is the needed action? _____

_____